Filter Drawer (FD) and System Solstice Models

Project _____

Item No. _____

Quantity _____

Model FD Solstice Filter Drawer

STANDARD ACCESSORIES

- Filter powder and fryer cleaner sample packets
- Filter paper envelope 18-1/2” x 20-1/2” (47 cm x 57 cm) sample packet - 25 sheets
- Cleaning brush
- Fryer scoop
- Filter scoop

STANDARD COMBINATIONS

Any combination of models SG14, SG14R, SG14T, SG18 and BNB are available. Refer to fryer specification sheets for options and other technical information. Additional filters may be needed for larger systems.

NOTE: Up to 6 models per filter. Standard filter location is on the left. Many other combinations are available. Call your dealer/distributor for more details.

OPTIONS & ACCESSORIES AT ADDITIONAL COST

- ☐ Flush hose
- ☐ Fryer brush
- ☐ Filter paper envelope 18-1/2” x 20-1/2” (47 cm x 57 cm); 100 sheets per package
- ☐ Paperless stainless steel mesh filter
- ☐ Filter heater for solid shortneing
- ☐ Filter scoop
- ☐ Filter powder

STANDARD SPECIFICATIONS

CONSTRUCTION

- Filter pan guide assembly are construction of polished stainless steel.
- Welded heavy-duty stainless steel filter pan mounted on two rigid casters for easy pan alignment and removal.
- 1/3 HP heavy duty motor and pump assembly.
- Large filter media area for filtering heavily breaded products.
- Special design pan stabilizer legs allow for ease of movement over rubber mats.

OPERATIONS

- Simple two-step operation:
  1. Blue handle valve is opened to drain oil into filter pan.
  2. Red handle valve is opened to return oil from filter to fryer.
- Self-aligning filter piping makes it easy to assemble and disassemble.
- Larger 3” (7.6 cm) drain line allows for faster draining without clogging.
- Light-weight, removable filter pickup assembly, with built-in handle, for fast media cleaning under busy conditions.
- High flow pump and large return lines produce faster oil refill times.
- Large filter media collects more debris, which extends time between changes.
- Filter pan lid attaches to cabinet for ease of use.
- Filter system can handle longer oil polishing duty cycles.
- All filter assembly parts are self-integrated. There are no loose parts to be misplaced.
- Large curved down spout drain virtually eliminates splashing and swivels for oil disposal.

APPROVALS

- CSA Certified (AGA, CGA)
- NSF Listed
- MEA Approved
- CE Certified
- Australian Gas Assoc. Certified (AuGA)

The Australian Gas Association

Patent Pending

Pitco Frialator, Inc., P.O. Box 501, Concord, NH 03302-0501 • 509 Route 3A, Bow NH 03304, USA
(603) 225-6684 • Fax (603) 225-8472 • *www.pitco.com*

Filter Drawer (FD) and System Solstice Models

Model FD Solstice Filter Drawer

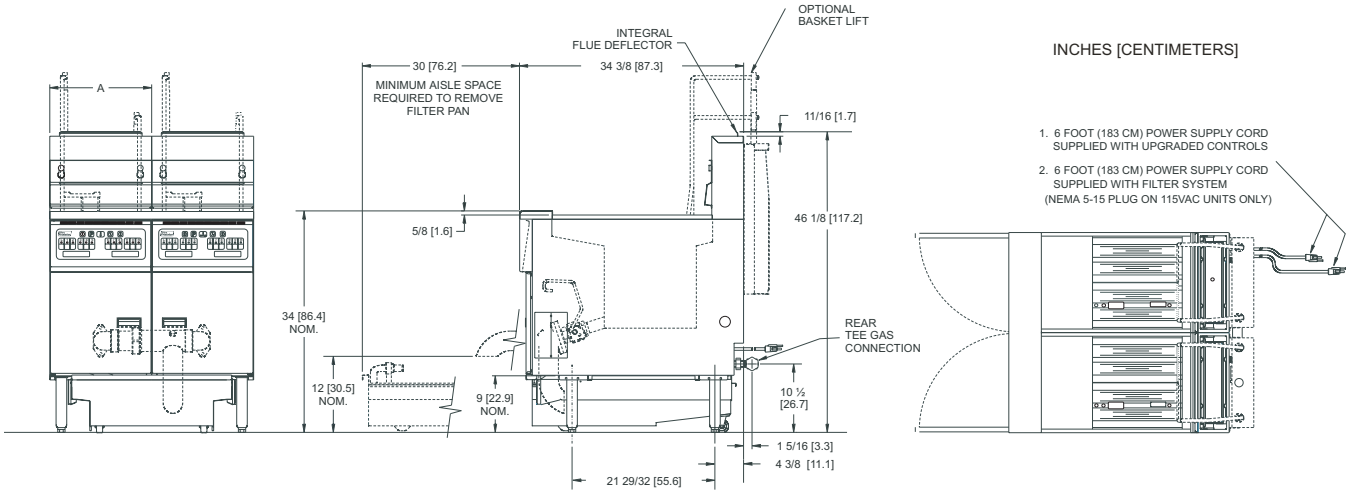

GAS REQUIREMENTS

Gas Rear Tee Manifold	Maximum Number of Fryer Positions Per Manifold	Rear Tee Gas Connection Location	Gas Connection Size
SG14S, SG14RS, SG14TS, SG18S, SGBNB14, SGBNB18	4 fryer positions allowed; include BNB unit in position count.	Default location is to the left. Connection is field reversible to the right.	1-¼" NPT (1-¼" BSP CE AuGA) for 367 KBTU / 108 kW / 387 mJ to 560 KBTU / 164 kW / 591 mJ. 1 " NPT (1" BSP CE, AuGA) up to 366 kBTU / 107 kW / 386 mJ. ¾" NPT (¾" BSP CE, AuGA) for single units.
Gas Type	**Store Manifold Pressure***	**Burner Manifold Pressure**	***Recommended Minimum**
Natural Gas	7" W.C. / 17.4 mbars / 1.75 kPa	4" W.C. / 10 mbars / 1 kPa	Check plumbing/gas codes for proper gas supply line sizing.
L.P. Gas	13" W.C. / 32.4 mbars / 3.25 kPa	10" W.C. / 25 mbars / 2.5 kPa	
Clearance Information	**Fryer Front**	**Fryer Sides, Rear, Bottom to any combustible material**	**Fryer Flue Area**
All Models	30" (76.2 cm) minimum	6" (15.2 cm) Do not Curb Mount	Do not block or restrict the flue gasses from flowing into ventilation system.

ELECTRICAL REQUIREMENTS

Options		Voltage / Phase / Frequency	Amps	Additional Amps for Filter Heater	Number of Power Cords	Power Cord Locations
Filter	8.0 GPM (30.3 LPM) 1/3 HP	115 / 1 / 60	7	3	1	At filter location
	6.7 GPM (25.4 LPM) 1/3 HP	220-230-240 / 1 / 50	3.6	1.5		
Fryer	Millivolt controls	Not required	0	N/A	0	No power cord
	Upgrade controls: Solid state, Digital, Computer, Basket Lift	115 / 1 / 60	1.7	N/A	1 cord per 4 fryers	Default is left
		220-230-240 / 1 / 50	0.9	N/A		

GAS REQUIREMENTS

Models	"A" Dim	Cook Area	Oil Capacity	Gas Input / Hour	Shipping Weight / Unit	Shipping Cube	Shipping Dimensions H x W x L
SG14	15-5/8 in 39.7 cm	14 x 14 x 4 in 35.6 x 35.6 x 10.2 cm	40 - 50 lbs 18 – 23 kg	110,000 BTU 33 kW (CE) / 119 mJ (AuGA)	200 lbs 91 kg	33 ft.³ .93 m³	58 x 22 ½ x 43 ½ in 147.3 x 57.2 x 110.5 cm
SG14R	15-5/8 in 39.7 cm	14 x 14 x 4 in 35.6 x 35.6 x 10.2 cm	40 - 50 lbs 18 – 23 kg	122,000 BTU 36 kW (CE) / 129 mJ (AuGA)	208 lbs 94 kg	33 ft.³ .93 m³	58 x 22 ½ x 43 ½ in 147.3 x 57.2 x 110.5 cm
SG14T	15-5/8 in 39.7 cm	7 x 14 x 4 in/tank 17.8 x 35.6 x 10.2 cm/tank	20-25 lbs/tank 9-11.5 kg/tank	50,000 BTU/tank 15 kW (CE) / 50 mJ (AuGA)/ tank	230 lbs 104 kg	33 ft.³ .93 m³	58 x 22 ½ x 43 ½ in 147.3 x 57.2 x 110.5 cm
SG18	19-5/8 in 49.8 cm	18 x 18 x 4 ~ 4 ¾ in 45.7 x 45.7 x 10.2 ~12.1 cm	70-90 lbs 32–41 kg	140,000 BTU 40 kW (CE) / 145 mJ ((AuGA)	226 lbs 103 kg	33 ft.³ .93 m³	58 x 22 ½ x 43 ½ in 147.3 x 57.2 x 110.5 cm
SGBNB14	15-5/8 in 39.7 cm	14 ½ x 24 ½ x 4-5/8 in 36.8 x 62.2 x 11.9 cm	N/A	N/A	130 lbs 59 kg	33 ft.³ .93 m³	58 x 22 ½ x 43 ½ in 147.3 x 57.2 x 110.5 cm
SGBNB18	19-5/8 in 49.8 cm	18 ½ x 24 ½ x 4-5/8 in 47 x 62.2 x 11.9 cm	N/A	N/A	150 lbs 68 kg	33 ft.³ .93 m³	58 x 22 ½ x 43 ½ in 147.3 x 57.2 x 110.5 cm
Filter	N/A	N/A	95 lbs 43 kg	N/A	125 lbs / 57 kg Add 20 lbs (9 kg) per fryer position	N/A Ships with fryer	N/A

SHORT FORM SPECIFICATION

Provide Pitco FD (Filter Drawer) Solstice filter system. Drain line shall be 3" (7.6 cm) diameter with a swivel drain spout for oil disposal. Filter pickup assembly shall have handles and utilize envelope type filter paper with 500 sq. inches (3,226 sq. cm) of filter area. Filter pump shall pump 8 GPM, 60 Hz (25.4 LPM, 50 Hz). Filter piping to be self-aligning for easy assembly. Filter lid shall be attached to the cabinet for ease of use. Filter pan shall have front stabilizer legs and rear rigid casters for portability. Provide accessories as follows:

TYPICAL APPLICATIONS

Space saving filter capable of filtering heavy to light breaded products fast and conveniently.

Pitco Frialator, Inc., P.O. Box 501, Concord, NH 03302-0501 • 509 Route 3A, Bow NH 03304, USA
(603) 225-6684 • Fax (603) 225-8472 • *www.pitco.com*

L10-134 Rev 4 (02/07) Printed in the USA

We reserve the right to change specifications without notice and without incurring any obligation for equipment previously or subsequently sold.